GATESAIR®

Connecting What's Next

PowerSmart® 3D

Flexiva™ FLX with PowerSmart® 3D

High-Efficiency FM Liquid-Cooled Transmitter

GatesAir efficiently leverages wireless spectrum to maximize performance for multichannel TV and radio services, offering the industry's broadest portfolio to help broadcasters wirelessly deliver and monetize content. With nearly 100 years in broadcasting, GatesAir's exclusive focus on the over-the-air market helps broadcasters optimize services today and prepare for future revenue-generating business opportunities. All research, development and innovation is driven from the company's facilities in Mason, Ohio and supported by the long-standing manufacturing center in Quincy, Illinois.

GatesAir's turnkey solutions are built on three pillars: Create, Transport and Transmit. The company is best known for powering over-the-air analog and digital radio/TV stations and networks worldwide with the industry's most operationally efficient transmitters. Groundbreaking innovations in low, medium and high-power transmitter reduce footprint, energy use and more to establish the industry's lowest total cost of ownership. Support for all digital standards and convergence with mobile networks ensure futureproof systems.

GatesAir's unrivalled legacy in over-the-air radio reaches new heights with the Flexiva™ transmitter family. The Flexiva range symbolizes decades of broadcast innovation and engineering experience, offering the industry's most complete and reliable solutions to suit all over-the-air power and coverage requirements in FM, AM, and digital radio. Truly groundbreaking strides in operational efficiency make high-quality broadcasting and low total cost of ownership a reality in equal measure.

Award Winning Service

From experienced installation and field service engineers to responsive factory experts, GatesAir provides the strongest service team in the broadcast transmission industry. Couple that team with reliable products, responsible service parts inventories and a demonstrated commitment to the industry, and you have a service offering that's perfectly matched to your equipment and your operations.

Contact Information

	+1 513 459 3400
Americas	Americas@gatesair.com
Europe, Middle East Asia and Africa	+33 1 47 92 44 20 EMEA-APAC@gatesair.com

For more information, please visit gatesair.com

Global Service Locations

Flexiva™ FLX with PowerSmart®3D

We did it again.

GatesAir is once again shattering the expectations of what is possible with high-power, solid-state liquid cooled transmitters.

- High-efficiency and the best analog and proven HD radio performance
- Separate, hot-swappable, compact power supply for each PA
- Proven reliability with highest redundancy of any transmitter design
- Optimized Real-Time Adaptive Correction (RTAC™)- best on market
- Lighter power amplifier (PA) module - 1/10 of the weight of other products currently available

More services usually means higher expenses. Higher operating expenses challenge the bottom line. Flexiva Flexiva FLX liquid cooled FM transmitters with PowerSmart 3D technology drive down total cost of ownership while allowing broadcasters to get the most out of their spectrum. Efficient modular designs that lower total cost of ownership while simplifying maintenance. Superior power density that maximizes FM coverage while reducing transmitter size and weight. Unparalleled performance that enhances quality while lowering utility bills. GatesAir is once again shattering the expectations of what is possible with high-power, solid-state transmitters from a cost versus performance ratio.

Product Overview

The GatesAir Flexiva™ FLX with PowerSmart® 3D is a Liquid-Cooled FM solid-state transmitter family that provides today's broadcaster with a single transmission platform capable of analog and digital. Built on the next generation of GatesAir's ground-breaking green transmission architecture, Flexiva transmitters offer today's FM analog or digital broadcaster compact, energy-efficient solutions to reliably deliver high performance and reduce Total Cost of Ownership.

The core PowerSmart®3D technology of Flexiva FLX assures low cost of ownership through reduced size, weight and energy use while improving performance.

Flexiva is designed for mid to high-power requirements, up to 88 kW, while utilizing the most compact design on the market today. Flexiva continues the legacy of the highly successful line of GatesAir FM transmitters and combines innovative, new quadmode RF amplification and software-defined exciter technology to take FM transmission to the next level.

The Flexiva FLX transmitter utilizes the latest 50-Volt LDMOS amplifier devices, new compact high-efficiency power supplies and the Flexiva FAX exciter with real-time adaptive correction (RTAC) for outstanding signal performance.

This powerful blend of new technologies provides best-in-class performance with respect to transmitter power efficiency, physical size, performance and features. The modular design allows for simpler installation, infrequent maintenance requirements together with dramatically reduced total cost of ownership over the life of the transmitter.

Not only can customers count on GatesAir for implementation, the company offers a range of support options from standard 24/7 telephone technical assistance, parts to installations, training, full system design and field maintenance contracts.

Savings You Can Count On!

The Flexiva™ FLX with PowerSmart® 3D is the highest efficiency transmitter on the market. This all-new design includes energy saving components.

Savings in The Details!

New PowerSmart® 3D amplifier technology provides a market-leading combination of efficiency and broadband operation

- Fully broadband, 87.5 to 108MHz — requires no tuning or adjustments.
- New high-efficiency, hot-swappable compact DC power supplies
- Hot-swappable light-weight PA modules
- Redundant high-efficiency pump system
- Incorporates field-proven Flexiva™ exciter providing best on-air sound quality
- Unrivaled digital power levels utilizing hybrid crest factor reduction
- Support for all worldwide digital modulation standards
- Modular & upgradeable architecture
- Rugged, reliable design and construction
- Ideal for N+1 configurations since all transmitters are identical and use the same PA's, minimizing spares requirements

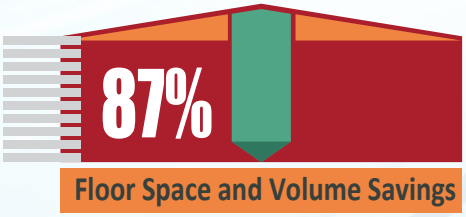

- Lowest energy usage
- Minimum operating cost

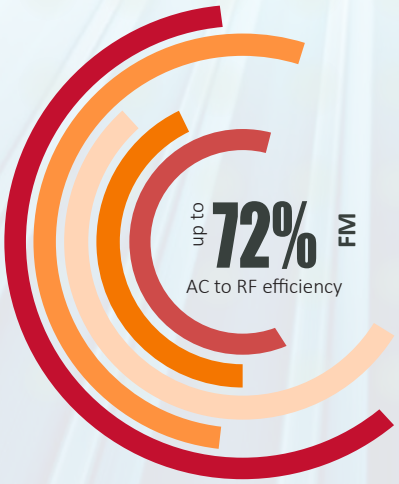

Additional Options

Options	Standard	Available
Robust backup controller	•	
Automatic backup audio switching	•	
Two SCA subcarrier inputs	•	
Integrated RDS Generator	•	
Professional Spectrum Analyzer*	•	
Digital MPX over AES	•	
Fast acting non-linear Real Time Adaptive Correction (RTAC), for optimum performance at all times*	•	
Advanced second generation Hybrid Crest Factor reduction to enable highest HD radio powers*	•	
IP enabled web remote interface with SNMP	•	
Parallel Remote Control	•	
Dual exciters and switcher (requires a second exciter)	•	
Supports external UPS on Exciters	•	
Internal GPS/GLONASS receiver for SFN timing		•
Local touch-screen GUI		•
N+1 systems and multi-transmitters per rack		•
Extended warranties and Service Level Agreements (SLA) to suit any requirement		•
Exciter Internal 4th Generation Exgine digital modulator for HD Radio		•

*Standard with Exgine digital modulator

Flexiva™ Compact – Low Power - 50 W to 3.5 kW

The new GatesAir Flexiva™ FAX exciter provides broadcasters with a powerful, software-defined platform, enabling the ultimate in performance, stability and durability. Featuring unparalleled signal processing power, a smaller footprint and advanced IP capabilities, Flexiva FAX builds upon a strong legacy of groundbreaking technological advances, pioneered by several decades of GatesAir innovations. Dramatically increased processing power together with new, advanced Real Time Adaptive Correction techniques, provides optimum signal performance over a wide variety of modulations and RF amplifier topologies.

Real-Time Adaptive Correction

GatesAir's exclusive Real-Time Adaptive Correction (RTAC) technology, standard in Flexiva transmitters, keeps your station within compliance while maximizing coverage. Featuring simultaneous linear and nonlinear adaptive pre-correction, RTAC interoperates with the Flexiva™ FAX exciter to continuously monitor transmitter output and performance while automatically adapting for system nonlinearities — delivering the optimal level of correction for your digital over-the-air signal.

Advanced Global Monitoring and Control

In addition to local control, the Flexiva FLX transmitter can be controlled from anywhere in the world with an intuitive, browser-based graphical user interface (GUI) over TCP/IP via a telecom or network connection with password protection. A rear RJ-45 jack is provided for LAN/WAN connection.

Full Simple Network Management Protocol (SNMP) facilities are provided for network management of the entire transmission system using industry-standard MIB protocols.

Remote Communication

The following remote interfaces are available:

- GUI
- Ethernet network connection RJ-45 (10/100Base-T) with TCP/IP protocol
- Automated remote alarms in the event of a fault, which are sent via SNMP or e-mail with the connection to a network
- Simple, parallel interface and legacy remote control systems

Multi-System Controller (MSC)

To support greater redundancy, the Multi-System Controller (MSC2) supports a range of backup options, including 1+1, full N+1 and dual-transmitter installations. The MSC2 monitors and controls the transmitter systems and controls RF switching.

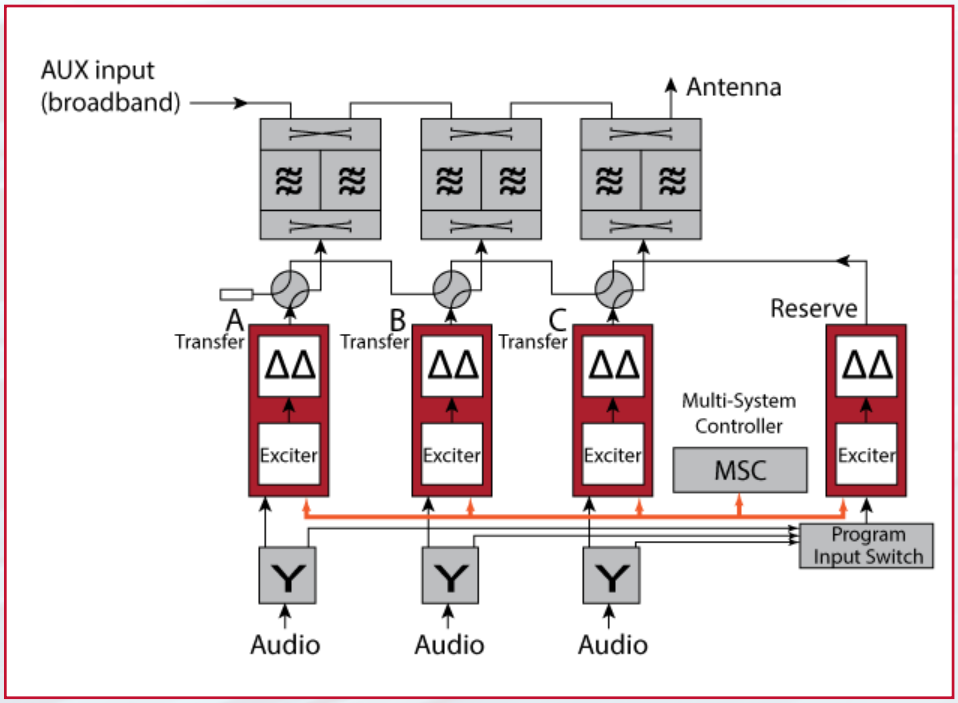

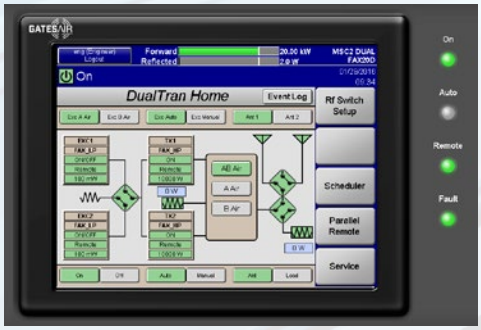

What is Total Cost of Ownership (TCO)?

TCO is the total cost to own and operate the transmitter system over time. This includes the initial equipment cost, installation/commissioning cost, routine and unscheduled maintenance costs, and ongoing repair and operational costs — and don't forget, rising energy costs. In fact, the lifetime operational expense of a transmitter is estimated at greater than five times the initial product cost.

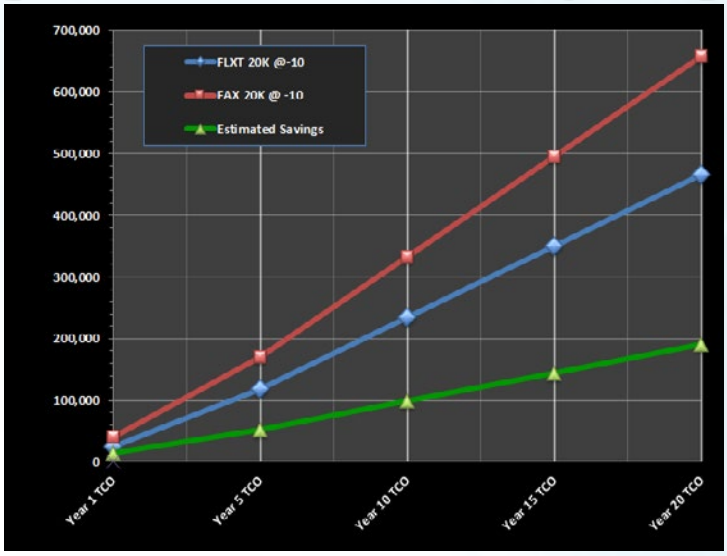

While power to the transmitter is the biggest item, other factors can also adversely affect the system efficiency. These include:

- AC transformers and voltage regulators ahead of transmitter
- Heat load to the room (affects HVAC costs)
- RF system losses
- RF feeder loss to antenna
- Antenna gain and pattern

Transmitter TCO Comparison Air to Liquid Cooling

Transmitter Models:	FLXT 20K @-10	FAX 20K @ -10	Estimated Savings
Output Power	14,000 W	14,000 W	
Energy Costs:			
Region	USA	USA	
Country/State	Ohio	Ohio	
Price/kWh	$0.082	$0.082	
Tx System Efficiency	53.7%	51.4%	
OPEX:	FLXT 20K @-10	FAX 20K @ -10	Estimated Savings
Annual OPEX	23,255	32,522	9,267
Year 1 TCO	24,755	40,022	15,267
Year 5 TCO	117,777	170,111	52,334
Year 10 TCO	234,053	332,721	98,668
Year 15 TCO	350,330	495,332	145,002
Year 20 TCO	466,607	657,943	191,336

Flexiva FM transmitters now incorporate GatesAir PowerSmart 3D technology to help broadcasters save money and reduce carbon footprints. PowerSmart 3D technology delivers superior operational efficiency through fully broadband, single-amplifier designs that simplify installation, improve performance, and streamline ongoing operation – including maintenance. This comes courtesy of a modular design that eliminates tuning, reduces weight, enhances redundancy through separate power supplies, and minimizes overall labor.

PowerSmart 3D technology also lowers monthly bills through sharp power efficiency increases (up to 50 percent), and slashes rack space requirements (exceeding 50 percent) through a dramatic increase in power density. These industry-leading strides in performance and physical size reduction combine to deliver the best possible total cost of ownership over the life of the transmitter – and return money to the pockets of our customers.

PowerSmart® 3D

Broadband Amplification

GatesAir PowerSmart 3D Technology Inside. The Flexiva liquid cooled transmitter offers superior power density and by far the highest available system efficiency on the market.

This new amplifier design utilizes the latest 50 volt LDMOS device technology to deliver a dramatic increase in power density, lower operating costs and reduced cost of ownership over the life of the transmitter.

Compact Footprint

As the most compact liquid-cooled FM transmitter, the Flexiva FLX is ideal for crowded, shared transmitter sites. The Flexiva FAX50 exciter drive further reduces rack space requirements. The Flexiva FLX transmitter reduces facility space requirements, simplifies installation, lowers shipping costs and allows for easier maintenance.

Highest Power Density

Flexiva FLX provides the highest power density with up to 10kW power block in only 16 rack units.

Improved Uptime and Costs

Hot-pluggable, redundant power amplifier (PA) and universal power supply (PS) modules make on-air servicing easy and eliminate costly service interruptions. Light-weight universal PA pallets and universal PS modules facilitate overnight/same-day shipping for simple, cost-effective spares holding. With lightweight subassemblies, the Flexiva FLX eliminates any two-person lift requirements for routine maintenance and troubleshooting.

Smooth Upgradeability

The Flexiva FLX system features the new FAX G4 Exgine technology, allowing for a seamless transition from analog FM to a digital standards such as HD Radio™ DRM+ or China Digital Radio.

Global Monitoring and Control

The Flexiva FLX transmitter can be controlled from anywhere in the world with an intuitive browser-based GUI or SNMP over TCP/IP via a telecom or network connection with password protection.

High-Efficiency Liquid-Cooling System

All Flexiva FLX systems feature a high-efficiency liquid-cooling system that has been carefully engineered for maximum efficiency over a wide range of ambient conditions and operating power levels.

The closed-loop liquid-cooling system utilizes a pump module with fully redundant cooling pumps and auto-changeover capability. The liquid-to-air outdoor heat exchanger also includes dual fans for maximum redundancy. The pump motor speed is controlled based on coolant requirements, with the heat exchanger fan motors speed controlled to provide the optimum cooling performance over a wide range of ambient weather conditions. These design features translate to maximum reliability at the lowest energy consumption in a small footprint.

The Flexiva FLX cooling system has been carefully engineered to allow for on-air servicing or replacement of pumps and fans, further maximizing on-air availability and minimizing revenue loss.

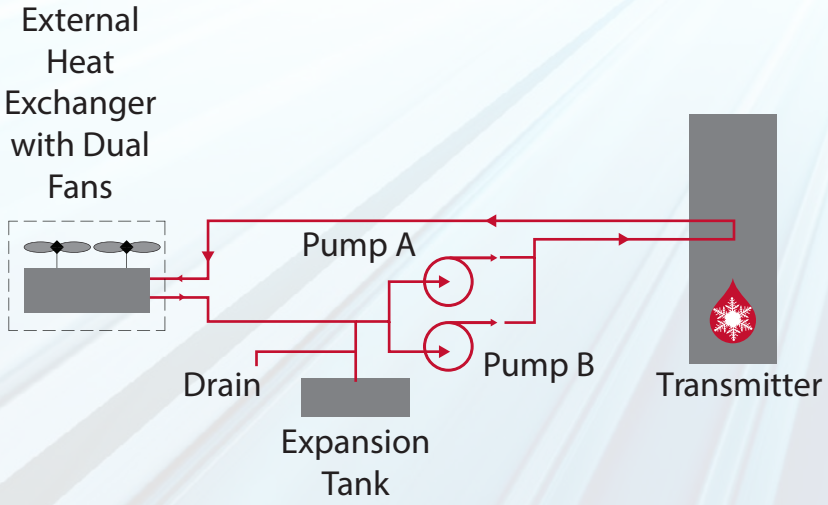

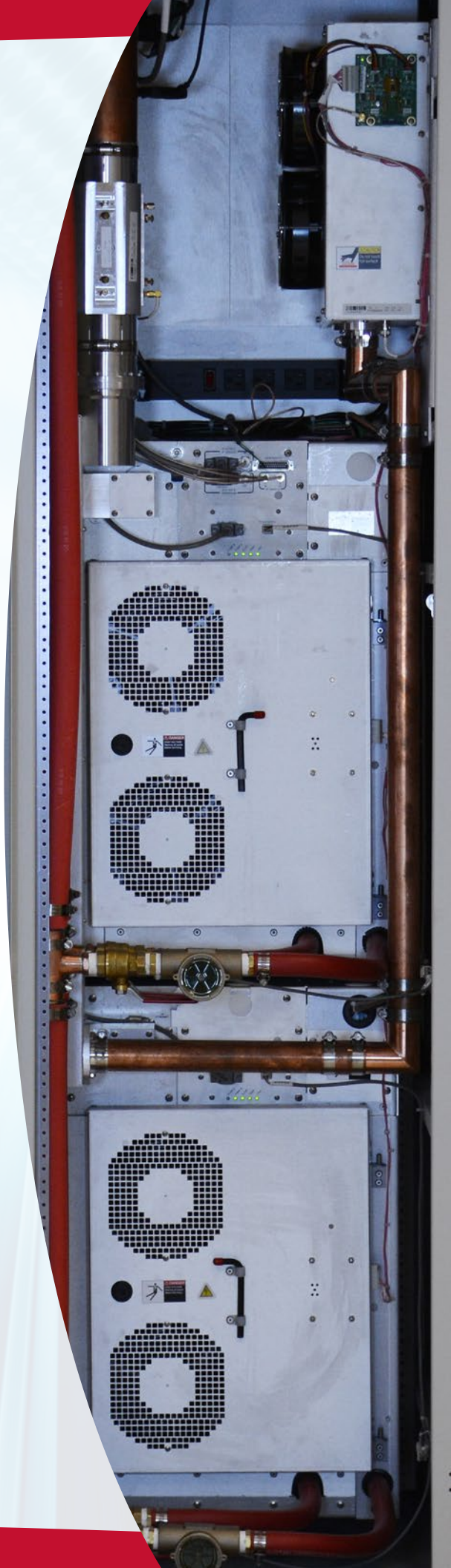

Flexiva™ FLX Block Diagrams

FLX 10K Dual Drive

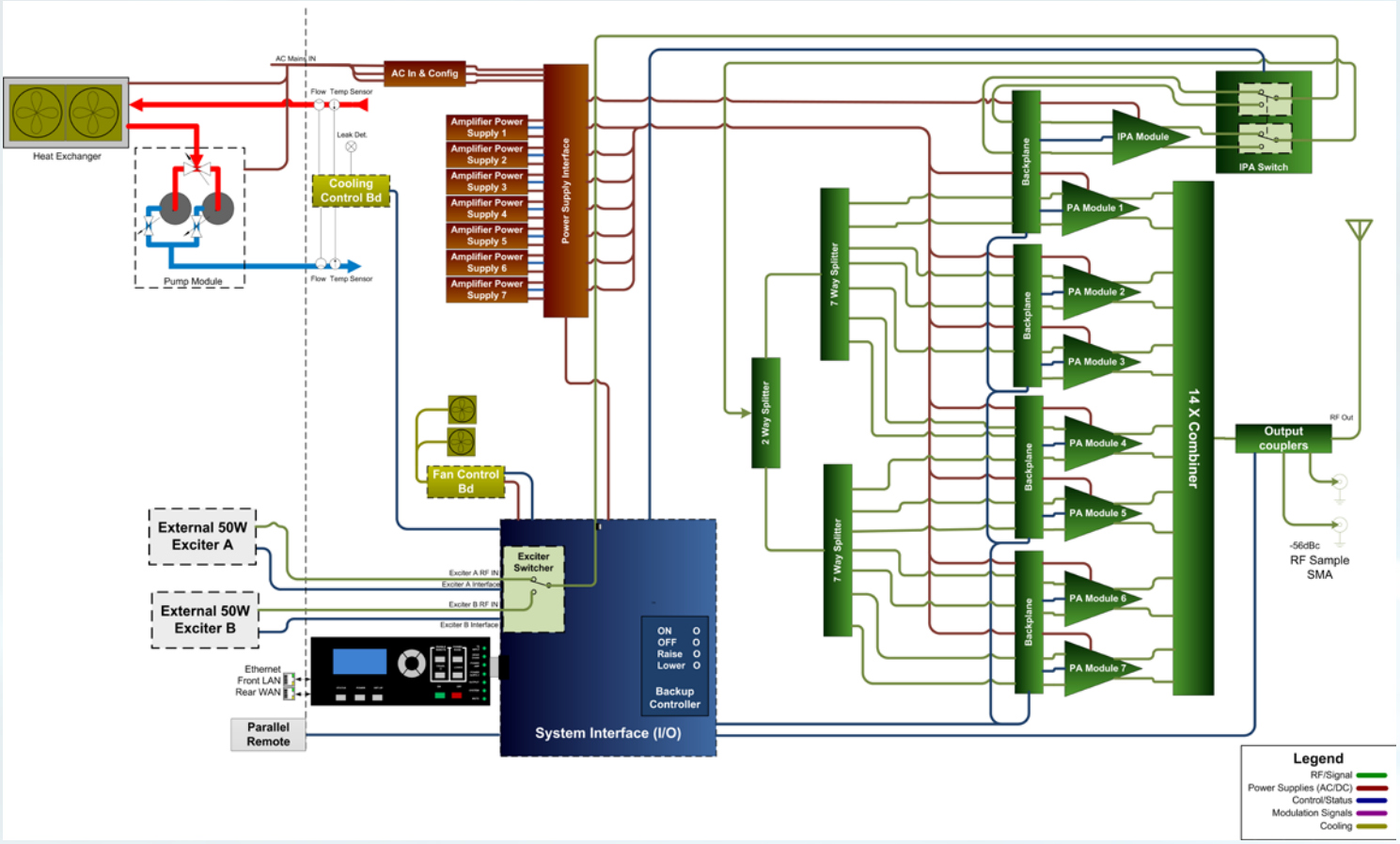

Specifications

Specifications and designs are subject to change without notice

General					
Transmitter Type		Solid State VHF Power Amplifier for FM, HD Radio, DRM+, and China Digital Radio			
Cooling System		Closed-loop, pressurized liquid coolant: 50/50 Ethylene Glycol or Propylene Glycol and distilled water			
Exciter		External FM Exciter. Support for dual exciters with automatic changeover			
Frequency Range		87.5 to 108.0 Mhz, 10 kHz steps			
Operating Modes		"Quad-Mode" on-the-fly switching between FM HD only, FM+HD or DRM+			
Frequency Stability		±150 Hz			
Power Stability		≤ ±0.25 dB			
Asynchronous AM SNR		>60 dB			
Synchronous AM SNR		>50 dB			
RF Harmonic and Spurious Suppression		Meets or exceeds FCC, IC, CE, CCIR IRTU and IEC215 requirements			
VSWR		Protected against open or short circuit, all phase angles. Capable of operation into infinite VSWR with proportional foldback above user adjustable threshold of up to 1.5:1			
Compliance		RoHs 2011/65/EU, FCC, CE, IC, Directive 2014/53/EU compliant			
Output Power - Max Watts		**FLX10K**	**FLX20K**	**FLX30K**	**FLX40K**
Analog Only	Max Power	11,000	22,000	33,000	44,000
	Typically Efficiency	72%	72%	72%	72%
Analog @ -20dBC HD	Max Power	10,396	20,792	31,188	41,584
	Typically Efficiency	56%	56%	56%	56%
Analog @ -14dBC HD	Max Power	9,616	19,232	28,848	38,464
	Typically Efficiency	56%	56%	56%	56%
Analog @ -10dBC HD	Max Power	7,455	14,909	22,364	29,818
	Typically Efficiency	52%	52%	52%	52%
HD-Only -20 dBc	Max Power	4,000	8,000	12,000	16,000
	Typically Efficiency	42%	42%	42%	42%
HD-Only -14 dBc	Max Power	3,700	7,400	11,100	14,800
	Typically Efficiency	42%	42%	42%	42%
HD-Only -10 dBc	Max Power	3,100	6,200	9,300	12,400
	Typically Efficiency	42%	42%	42%	42%
Electrical					
AC Input Voltage, VAC 47-63Hz Single Phase & 3-Phase (3-Wire) Delta: 3-Phase (4-Wire) Wye):		190-264 330-460			
Power Factor		0.99% Typical			
Mechanical		**FLX10K***	**FLX20K**	**FLX30K**	**FLX40K**
Width		23.5 in. (59.7 cm)	23.5 in. (59.7 cm)	47 in. (120 cm)	47 in. (120 cm)
Depth		45 in. (115.3 cm)	45 in. (115.3 cm)	45 in. (115.3 cm)	45 in. (115.3 cm)
Height		37RU 71 in. (181 cm)	44RU 83 in. (211 cm)	44RU 83 in. (211 cm)	44RU 83 in. (211 cm)
Weight (approx w/ modules installed)		588 lbs, 267 kg	1002 lbs, 455 kg	1,700 lbs, 771 kg	2,200 lbs, 998 kg
Environmental					
Altitude		15,000 ft. (4,572 m) AMSL			
Ambient Temperature Range		0° to 45° C (32° to 113° F) at sea level (upper limit derated 2° C [3.6° F] per 300 m [984 ft] elevation AMSL)			
Humidity		95%, non-condensing			
Cooling Method		Liquid-cooled, using 50/50 mix of ethylene or propylene glycol and water			

*NOTE: Dimensions for the FLX10K reflect transmitter installed in 37RU deluxe rack.

Award Winning Service -- Global Locations

From experienced installation and field service engineers to responsive factory experts, GatesAir provides the strongest service team in the broadcast transmission industry. Couple that team with reliable products, responsible service parts inventories and a demonstrated commitment to the industry, and you have a service offering that's perfectly matched to your equipment and your operations.

Ordering Information

Our GatesAir experts will help you determine the most efficient solution to meet your requirements. Visit www.gatesair.com/contact to find your representative.

GatesAir is a registered trademark of GatesAir, Inc. Trademarks and tradenames are the property of their respective companies.

CONNECTING WHAT'S NEXT

5300 Kings Island Drive, Suite 101

Mason, OH USA 45040

Tel: +1 513 459 3400

GatesAir.com

	+1 800 622 0022
	+1 513 459 3400
Americas	Americas@gatesair.com
Europe, Middle East	+33 1 47 92 44 20
Asia and Africa	EMEA-APAC@gatesair.com

Made in USA

For more information, please visit gatesair.com

©2021 GatesAir

BROCH-FLEXIVA-FLX-EN-TL-KA-050421